Luminaires - Ceiling Recessed

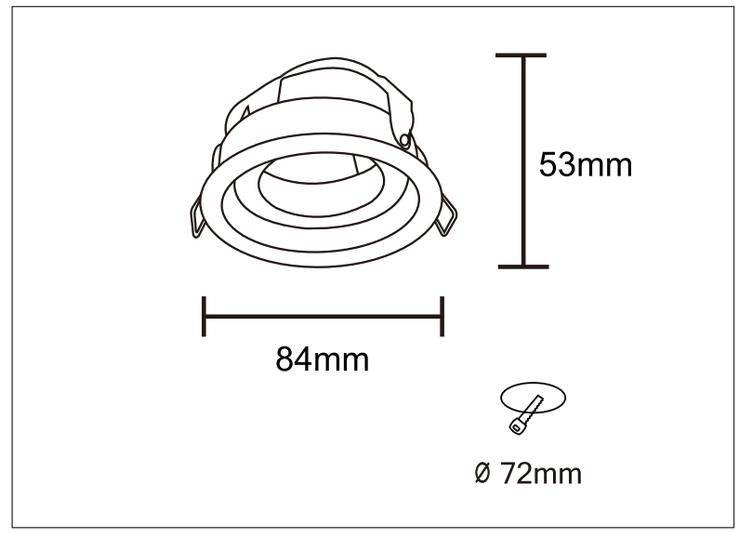

Technical Specification

Art No.:	LIC-7187	Light Source:	GU10 (not included)
Material:	Aluminum	Power Supply:	AC220-240V 50/60Hz
Finish Color:	Black/White	Power:	Max 7W